HVCOSAEM65AL0000

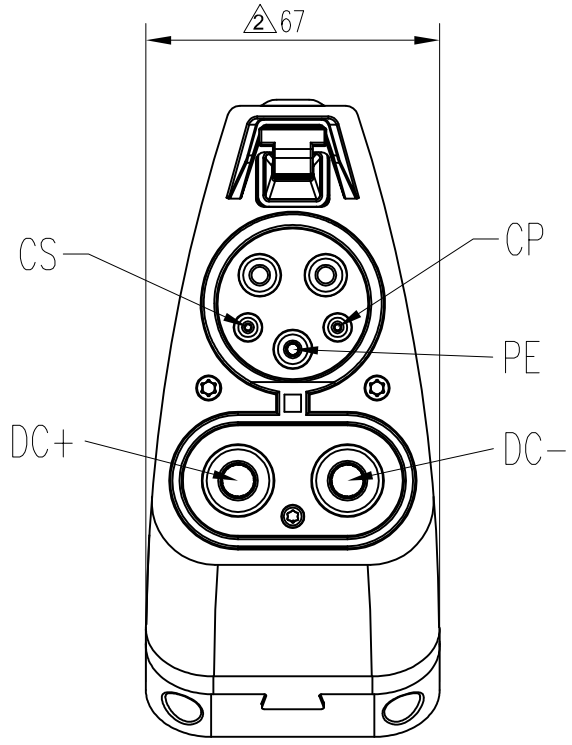

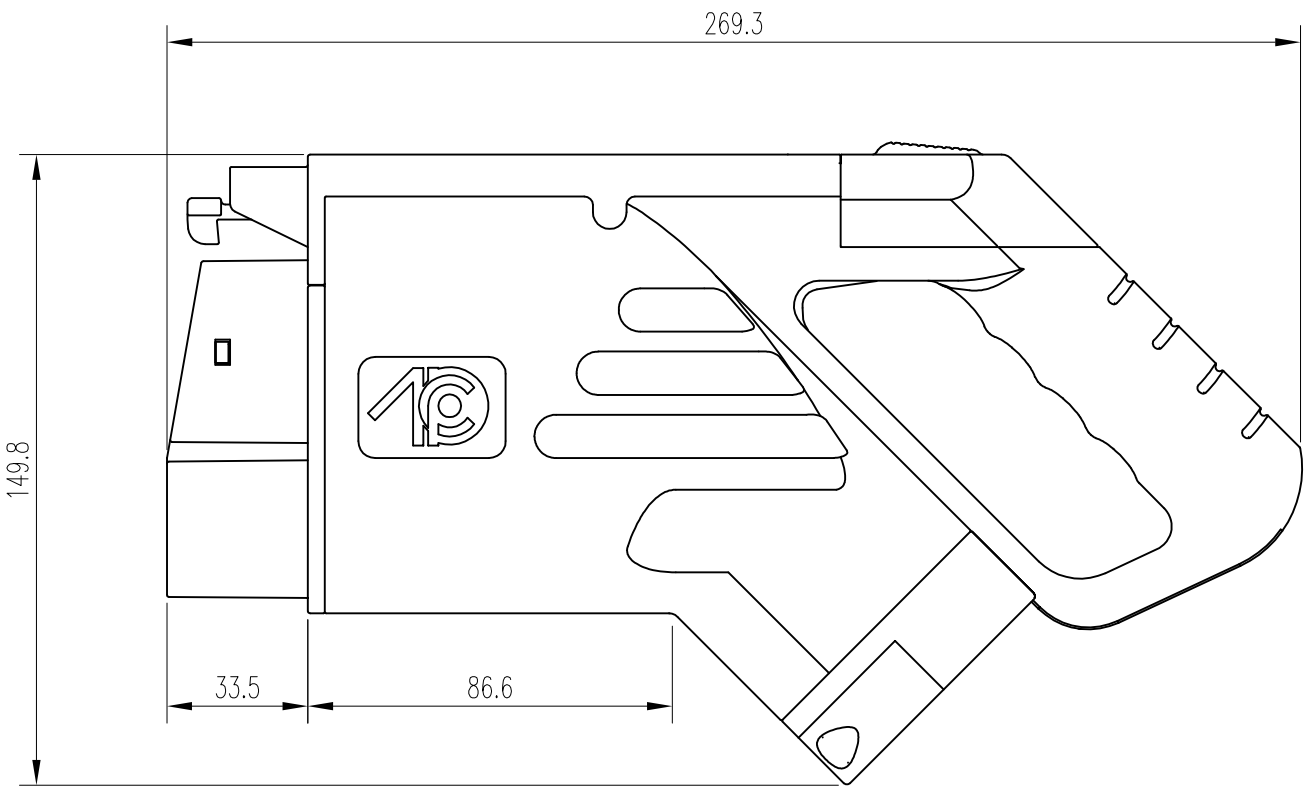

端子和线缆颜色定义

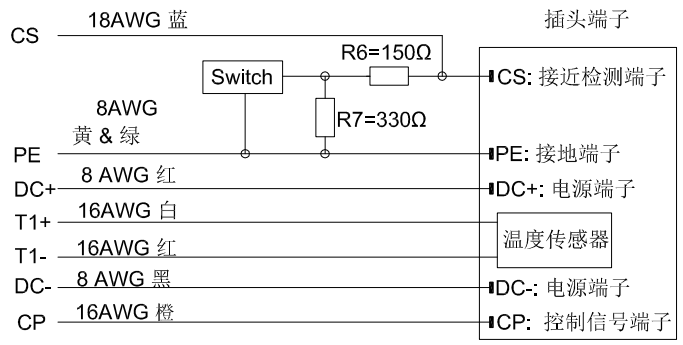

Technical Data:/技术参数:		
Rated Current:/额定电流:	65A @50°C	✦
Rated Votage:/额定电压:	600V DC @50°C	✦
Withstanding Votage:/耐电压:	2500V AC	✦
Insulation Resistance:/绝缘阻抗:	100MΩ Min	✦
Contact Resistance:/接触阻抗:	0.35 Milliohms Max	✦
Durability:/插拔次数:	10000 Cycles	◎
IP-Class:/防水等级:	IP54(Mated)	◎
Operating Temperature:/工作温度:	-30°C~+110°C	

DIMENSIONS ANSI Y14.5M UNITS: MM CAD FILE	TOLERANCES .X ±0.5 .XX ±0.30 ANGLES ±2°	PROJECTION	Amphenol Pcd Shenzhen ENGR	TITLE SAE Combo Plug With 65A
ORIGINAL NOT FOR CUSTOMER DISTRIBUTION	THIS DOCUMENT CONTAINS PROPRIETARY INFORMATION WHICH IS THE CONFIDENTIAL PROPERTY OF AMPHENOL PCD SHENZHEN		CHKD APPD	SIZE A3 / DWG NO. C-HVCOSAEM65AL0000 / REV 2 CODE: / SCALE 1:1 / SHEET 1 OF 1

C-HVCOSAEM65AL0000

C-HVCOSAEM65AL0000