SCALE 3:5

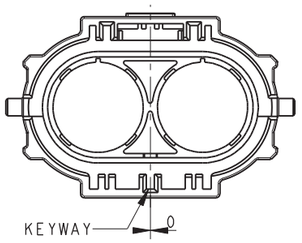

HVSL 1000 06 2 A
CODING A

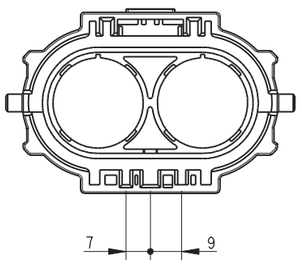

HVSL 1000 06 2 B
CODING B

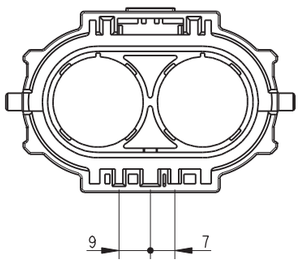

HVSL 1000 06 2 C
CODING C

CUSTOMER DRAWING

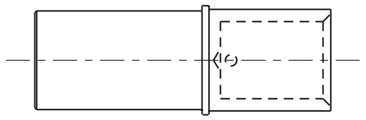

SOCKET CONTACT

P/N: C4200036161 --70 mm^2 WIRE
C4200036162 --50 mm^2 WIRE
C4200036163 --35 mm^2 WIRE
C4200036164 --25 mm^2 WIRE

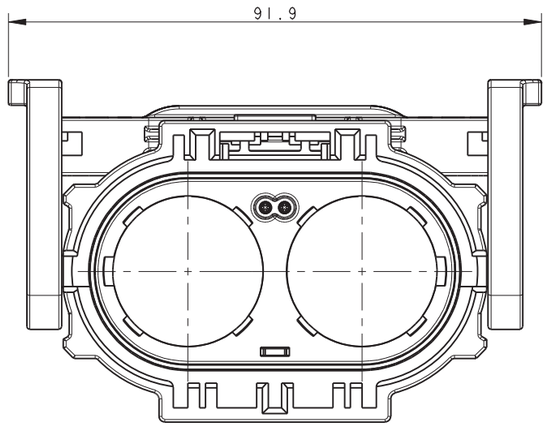

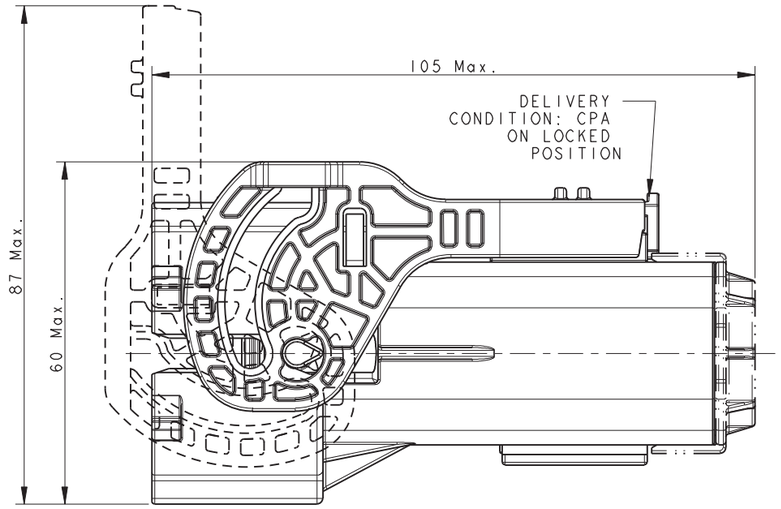

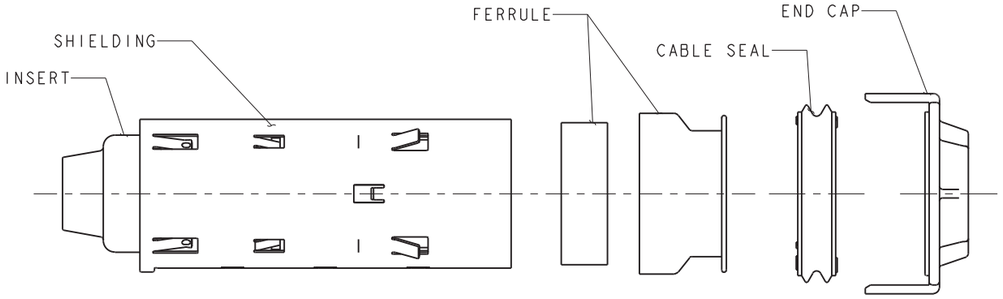

KIT OF SOCKET INSERT

P/N: C4220036011 --70 mm^2 WIRE OD=19.0 ± 0.7MM
C4220036012 --50 mm^2 WIRE OD=16.5 ± 0.4MM
C4220036013 --35 mm^2 WIRE OD=14.2 ± 0.4MM
C4220036014 --25 mm^2 WIRE OD=11.9 ± 0.3MM

NOTES:

1. MATERIAL & FINISH:
   PLASTIC BODY: THERMOPLASTICS UL 94V-0 ORANGE COLOR
   SOCKET CONTACT: COPPER ALLOY SILVER PLATED
   SHIELDING: COPPER ALLOY TIN PLATED
   FERRULE: STAINLESS STEEL
   CABLE SEAL: SILICONE RUBBER
2. ELECTRONICAL CHARACTERISTICS:
   HIGH VOLTAGE RATED 1000 V DC MAX.
   CURRENT RATED 250 A MAX.
   WITHSTANDING VOLTAGE 3000 V AC
   PRODUCTS ARE COMPLIANCE WITH EN 60664-1 POLLUTION II
3. ENVIROMENT CHARACTERISTICS:
   IP67 IP6K9K RATED (WHEN MATING)
   IP2XB RATED FOR FINGER TOUCH-PROOF
4. DELIVERY WITHOUT CONTACTS. THE CONTACTS SHOULD BE ORDERED SEPARATELY.
5. SEE APCD-TD-073 FOR ASSEMBLY INSTRUCTION.

DIMENSIONS	TOLERANCES	PROJECTION		TITLE
ANSI Y14.5M UNITS: MM Pro/E FILE	.X ±0.3 .XX ±0.10 ANGLES ±0.5°		ENGR	HVSL 1000 06 2 X STRAIGHT PLUG ASSEMBLY
ORIGINAL NOT FOR CUSTOMER DISTRIBUTION	THIS DOCUMENT CONTAINS PROPRIETARY INFORMATION WHICH IS THE CONFIDENTIAL PROPERTY OF AMPHENOL PCD SHENZHEN		CHKD APPD	SIZE A3 / DWG NO. C-HVSL1000062X / REV 3
				CODE: 58982 / SCALE: 1:1 / SHEET 1 OF 2

C-HVSL1000062X

C-HVSL1000062X

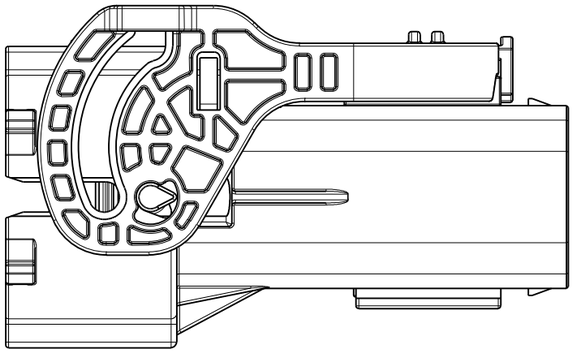

HVSL 1000 06 2 X

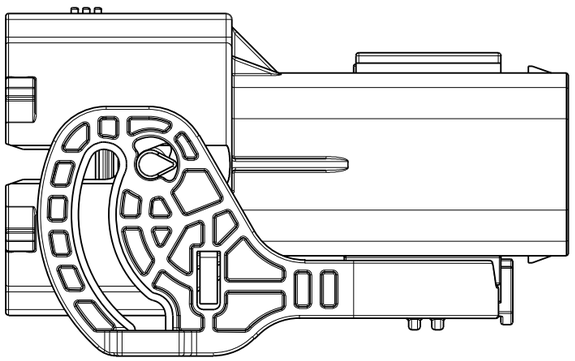

HVSL 1000 06 2 X RL
(REVERSE LEVER)

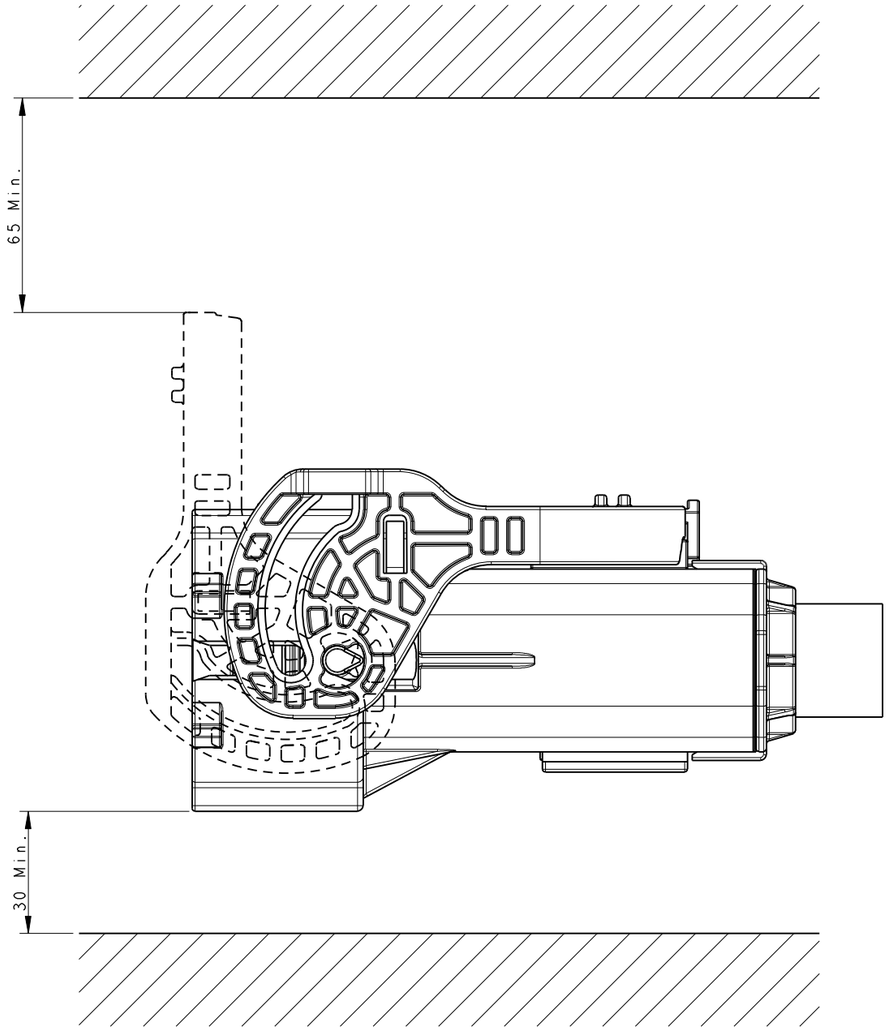

INSTALLATION CLEARANCE
ACC. TO USCAR 25

C-HVSL1000062X

C-HVSL1000062X

SIZE	DWG NO.	REV
A3	C-HVSL1000062X	3
CODE: 58982	SCALE: 1:1	SHEET 2 OF 2